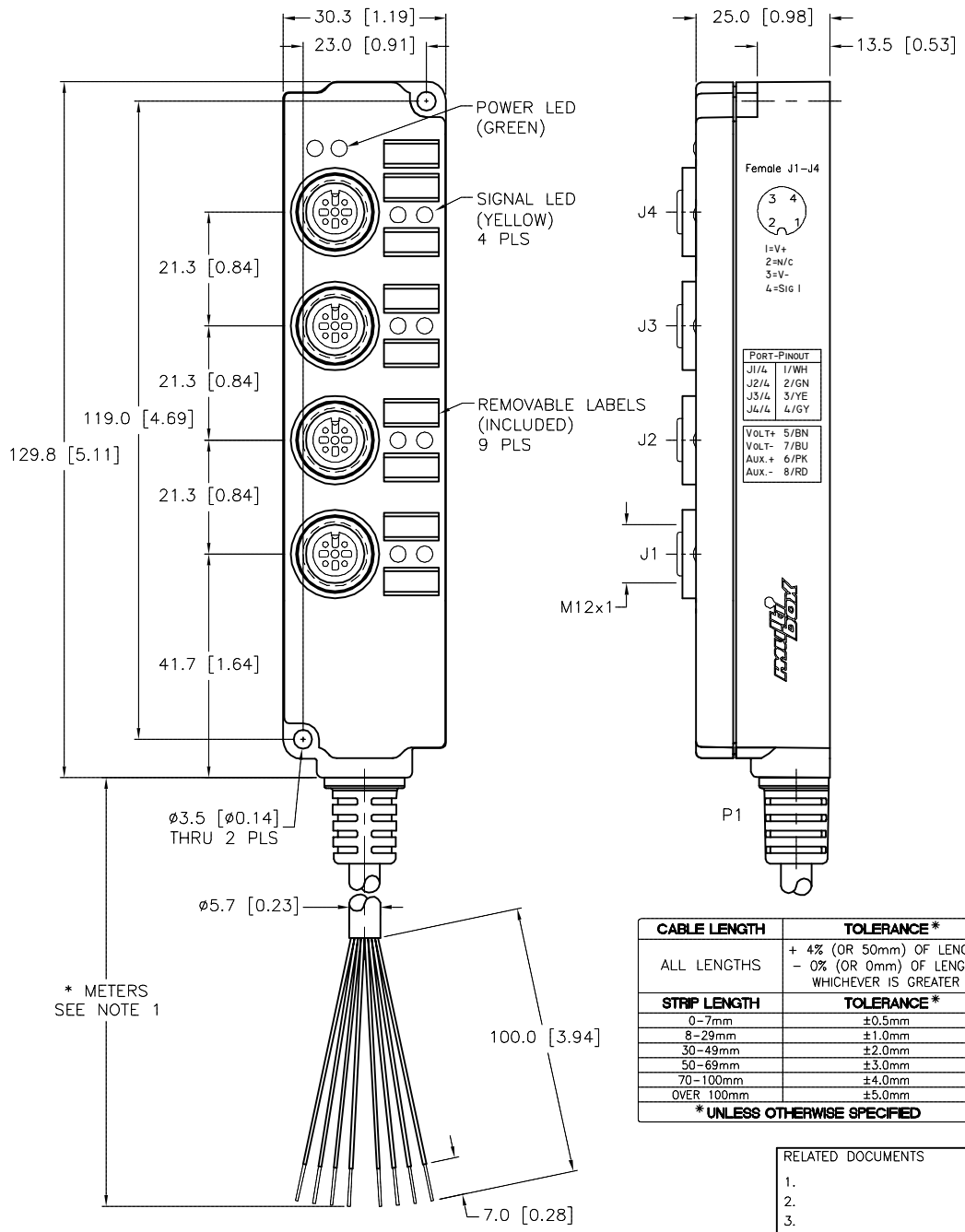

CABLE LENGTH	TOLERANCE *
ALL LENGTHS	+ 4% (OR 50mm) OF LENGTH – 0% (OR 0mm) OF LENGTH WHICHEVER IS GREATER
STRIP LENGTH	**TOLERANCE ***
0–7mm	±0.5mm
8–29mm	±1.0mm
30–49mm	±2.0mm
50–69mm	±3.0mm
70–100mm	±4.0mm
OVER 100mm	±5.0mm
* UNLESS OTHERWISE SPECIFIED	

SPECIFICATIONS

CABLE DATA	
NUMBER OF CONDUCTORS [AWG]	8x24 AWG
CONDUCTOR INSULATION MATERIAL	PVC
OUTTER JACKET MATERIAL/COLOR	PVC/YELLOW
MATERIAL	
HOUSING/COLOR	NYLON/BLACK
RECEPTACLE/PLATING	BRASS/NICKEL
CONTACT CARRIERS/COLOR	NYLON/BLACK
CONTACTS/PLATING	BRASS/GOLD
SEALING RING	FKM/FPM
ELECTRICAL DATA	
OPERATING VOLTAGE	10–48 VDC
OPERATING CURRENT	4.0 AMPS PER PORT
TOTAL CURRENT	2.0 AMPS USING SINGLE POWER PAIR 4.0 AMPS USING DUAL POWER PAIR
MECHANICAL DATA	
PROTECTION CLASS	IP 67 – ONLY WHEN ALL RECEPTACLES ARE COVERED WITH PLUGS OR CONNECTED
OPERATING TEMPERATURE	–30°C to +80°C (–25°F to +176°F)

FEMALE END VIEW (J1–J4)

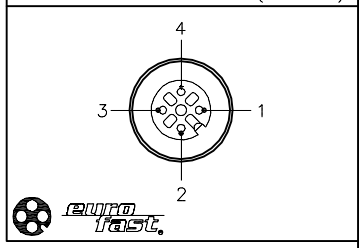

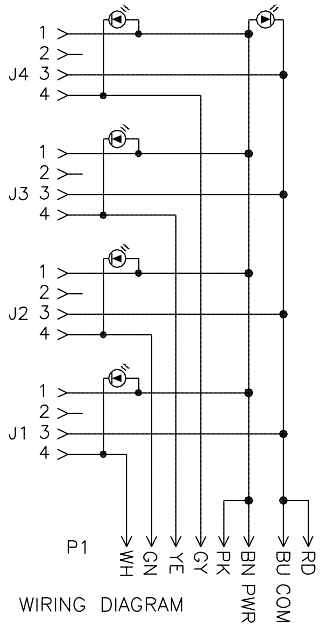

WIRING DIAGRAM

CLOSURE CAPS
(2 INCLUDED)

SOURCE DRAWING - FOR REFERENCE ONLY

NOTES:

1. "*" INDICATES CABLE LENGTH IN METERS. CONTACT TURCK TO ORDER SPECIFIC LENGTHS.

2. STRIP AND TIN LENGTHS ARE FOR REFERENCE ONLY; SOME LENGTHS MAY NOT BE STRIPPED OR TINNED.

REV	DESCRIPTION	BY	DATE	ECO NO.
D	UPDATED SEALING RING MATERIAL PER ECO	TV	08/11/16	56141

RELATED DOCUMENTS
1.
2.
3.
4.

3RD ANGLE PROJECTION

THIS DRAWING IS CONFIDENTIAL AND THE PROPERTY OF TURCK INC. USE OF THIS DOCUMENT WITHOUT WRITTEN PERMISSION IS PROHIBITED.

TURCK
3000 CAMPUS DRIVE
MINNEAPOLIS, MN 55441
1-800-544-7769
(763) 553-7300
(763) 553-0708 fax
www.turck.us

MATERIAL: SEE SPECIFICATIONS

FINISH: SEE SPECIFICATIONS

ALL DIMENSIONS DISPLAYED ON THIS DRAWING ARE FOR REFERENCE ONLY

CONTACT TURCK FOR MORE INFORMATION

DRFT: DD | DATE: 05/29/03
APVD: | SCALE: 1=1.3

UNIT OF MEASUREMENT
MILLIMETER [INCH]
DO NOT SCALE THIS DRAWING

DESCRIPTION: 4MBM12-4N2-*C

IDENTIFICATION NO.:

REV: D

FILE: 777001974 | SHEET 1 OF 1

Approved 08/16/2016, work order #112171 by R.W